PERFECTION IN SCREENPRINTING

Verdrahtungsplan
wiring diagram
SYNCHROPRINT X-Type InEL

Inhalt: Seite / page Contents:

Deckblatt	1	cover sheet
Blockschaltbild	2	block diagram
Rakelarm Teil 1	3	squeegee arm part 1
Rakelarm Teil 2	4	squeegee arm part 2
Anschlussplatine	5	connection PCB
Master Einheit	6	master unit
Terminal Einheit	7	terminal unit
Antriebsplatine	8	drive PCB
Not-Halt Relais	9	safety device
Klemmenblock	10	terminal block
Frequenzumrichter	11	frequency converter
M-Touch Pro	12	m-touch pro

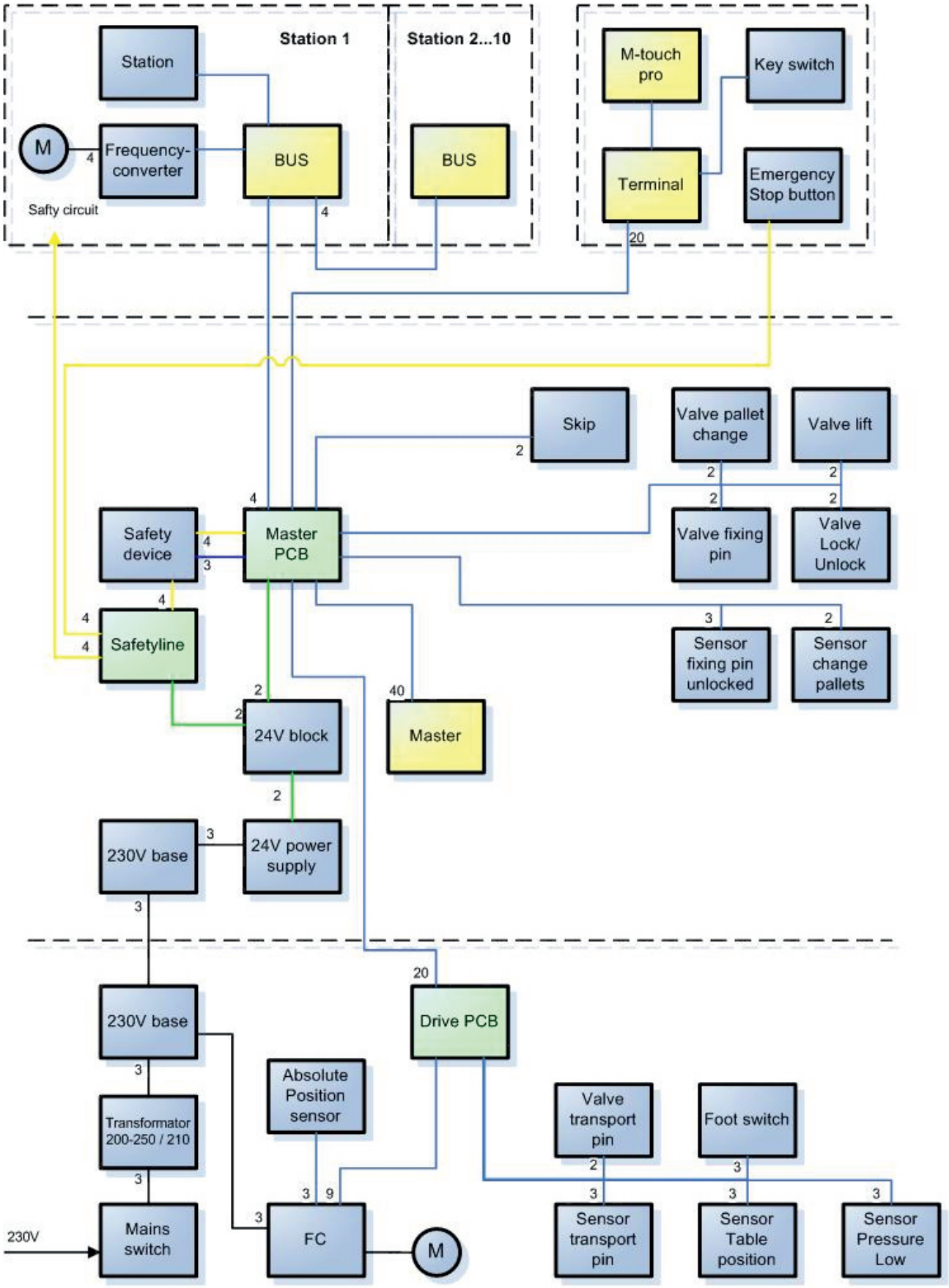

Block diagram X-Type InEl

	Wiring diagram X-Type Inel	
MHM PERFECTION IN SCREENPRINTING	Blockschaltbild/ block diagram	
	REV 1.5	Seite/page 2

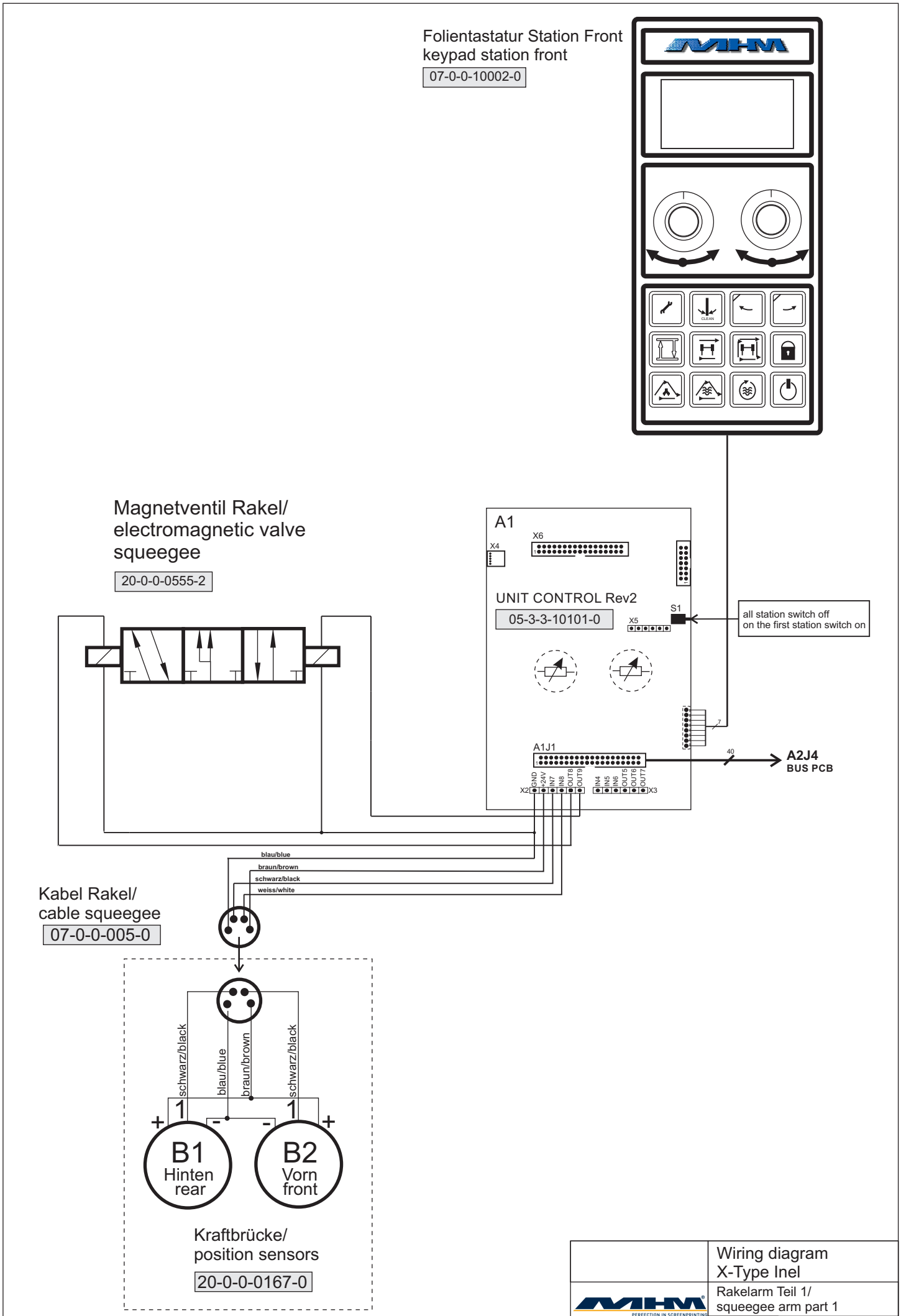

	Wiring diagram X-Type Inel	
	Rakelarm Teil 1/ squeegee arm part 1	
	REV 1.5	Seite/page 3

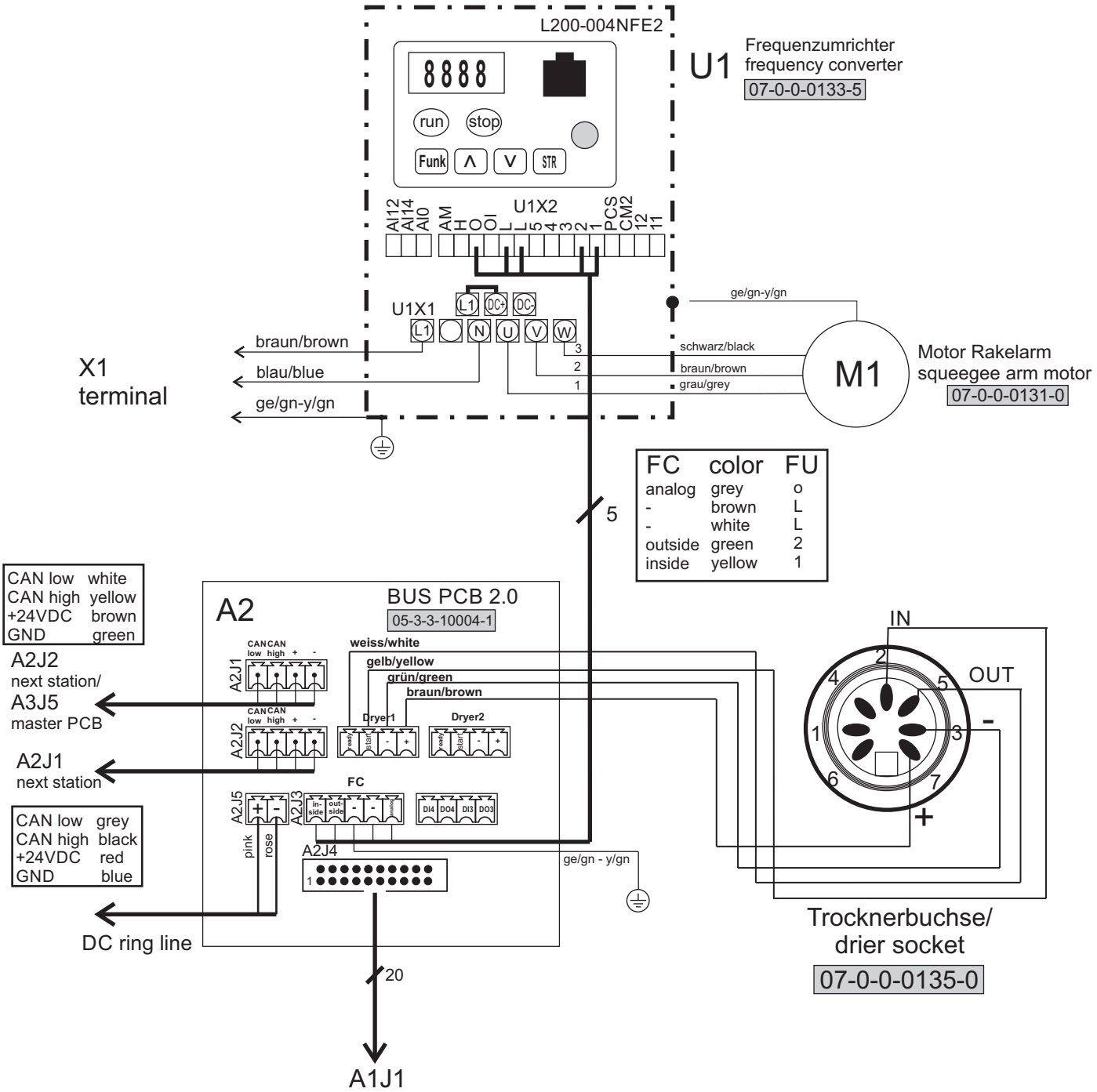

	Wiring diagram X-Type Inel
MHM PERFECTION IN SCREENPRINTING	Rakelarm Teil 2/ squeegee arm part 2
REV 1.5	Seite/page 4

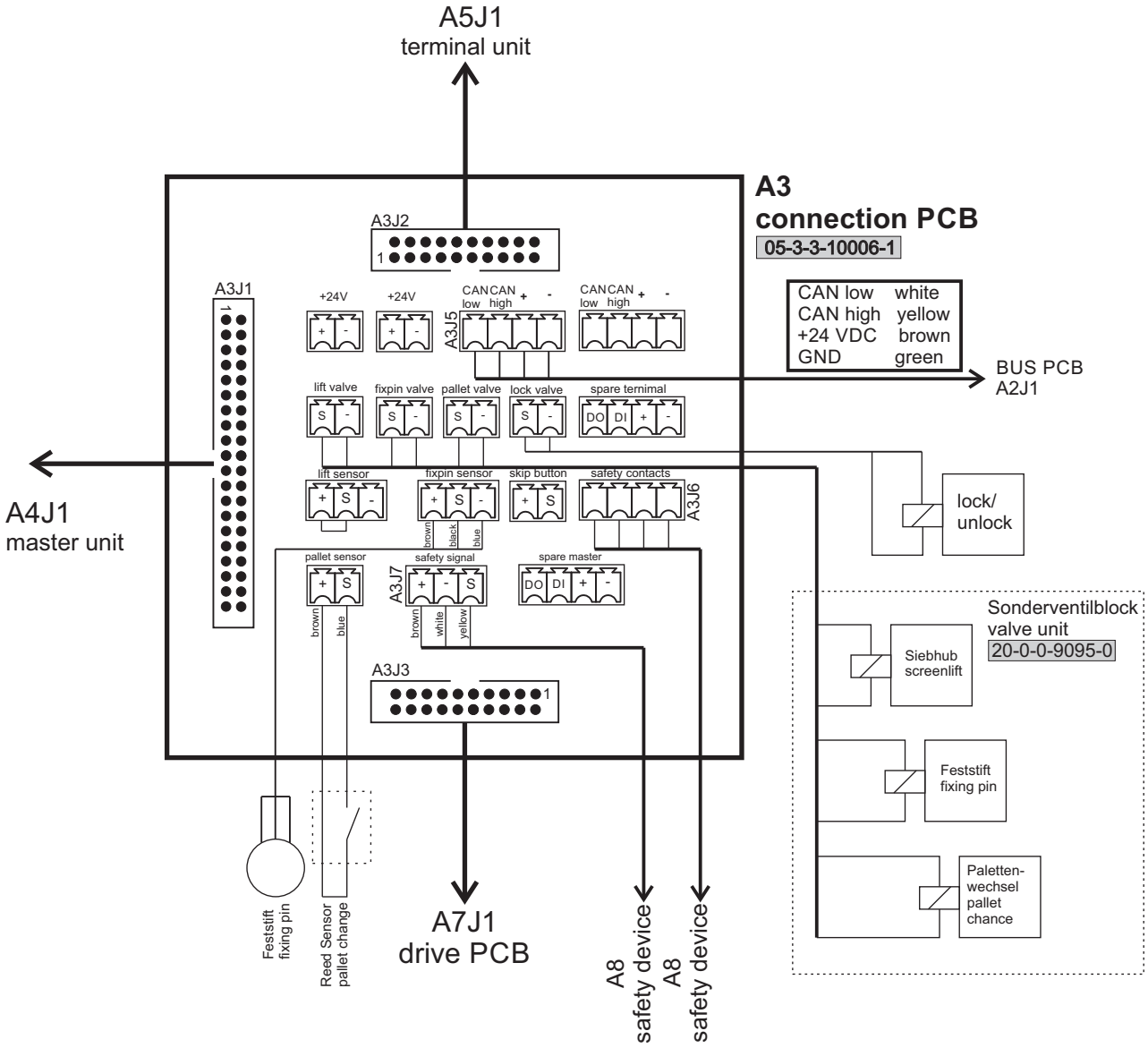

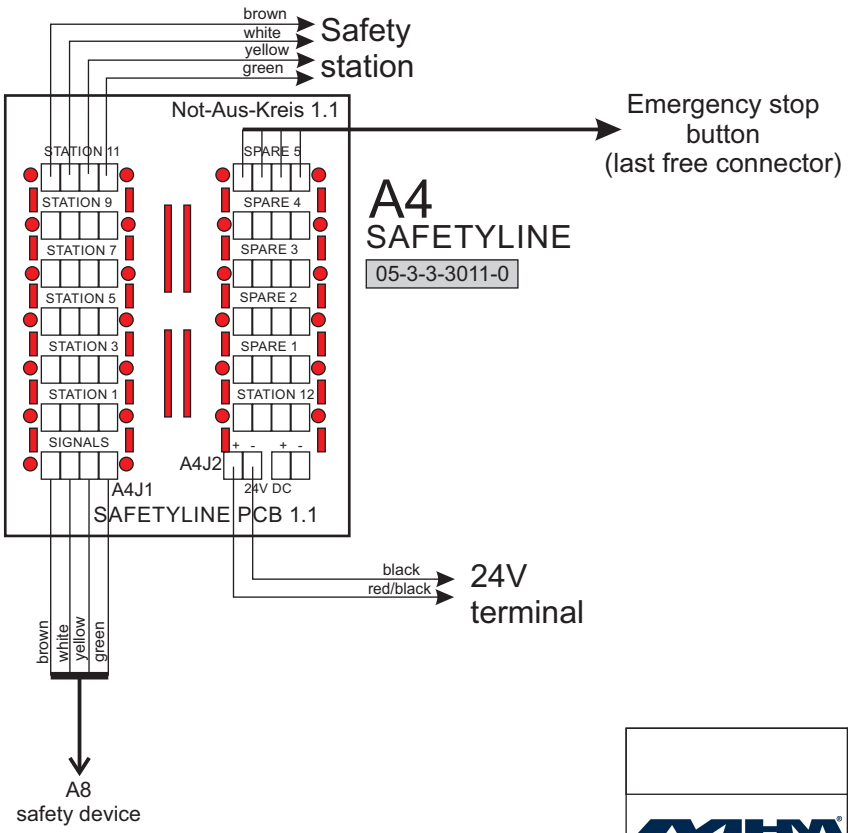

	Wiring diagram X-Type Inel
MHM PERFECTION IN SCREENPRINTING	Anschlussplatine/ connection PCB
REV 1.5	Seite/page 5

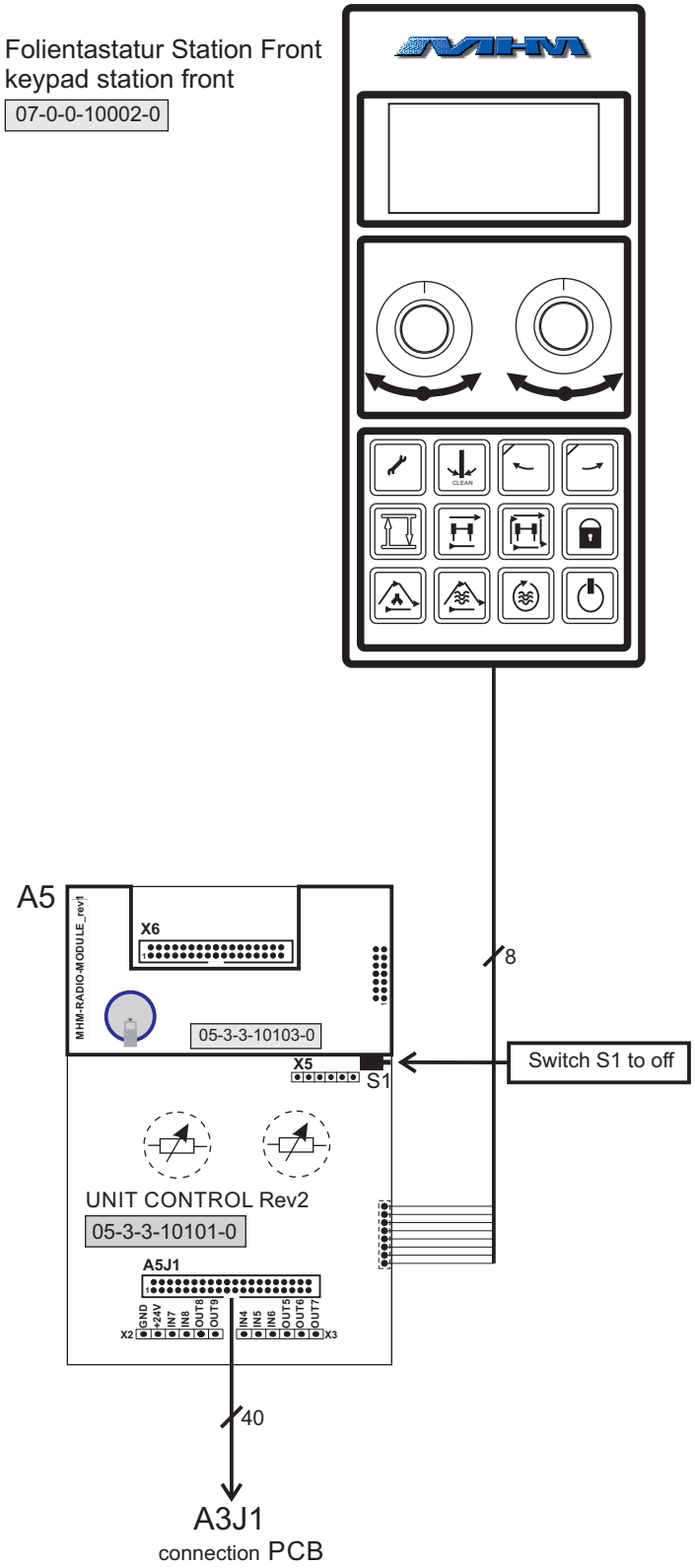

	Wiring diagram X-Type Inel
	Master Einheit/ master unit
REV 1.5	Seite/page 6

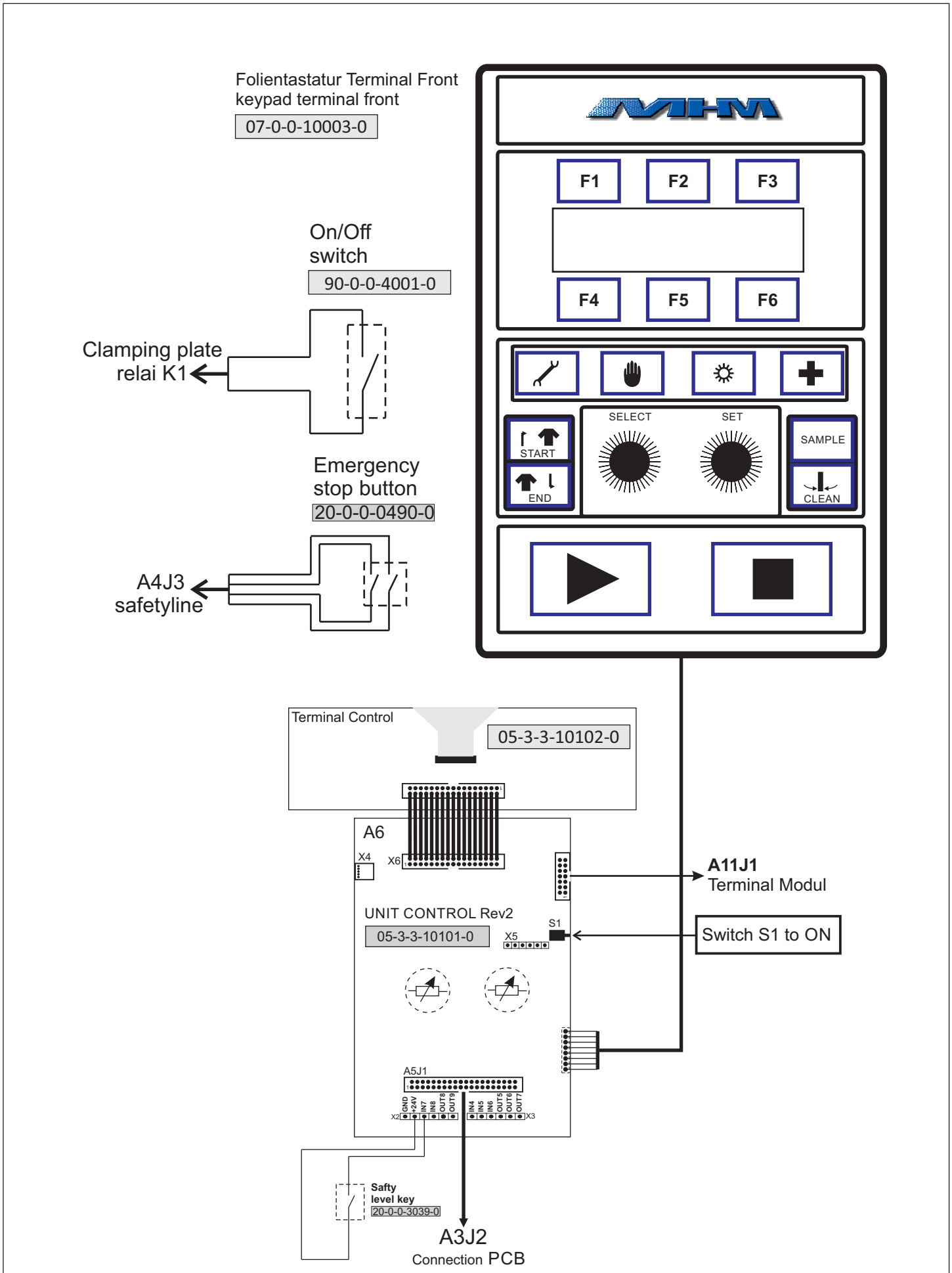

	Wiring diagram X-Type Inel	
	Terminal Einheit/ terminal unit	
	REV 1.5	Seite/page 7

At drive PCB 1.2 or lower the rotary encoder is connected directly to the frequency converter!

Be aware of varying colour coding at different encoder types.
Two rotary encoders are possible:

encoder type	Supply (+)	Ground (-)	Output (SENS)
2801 118 111 104	brown	green	white
2801 620 111 206	green	brown	white

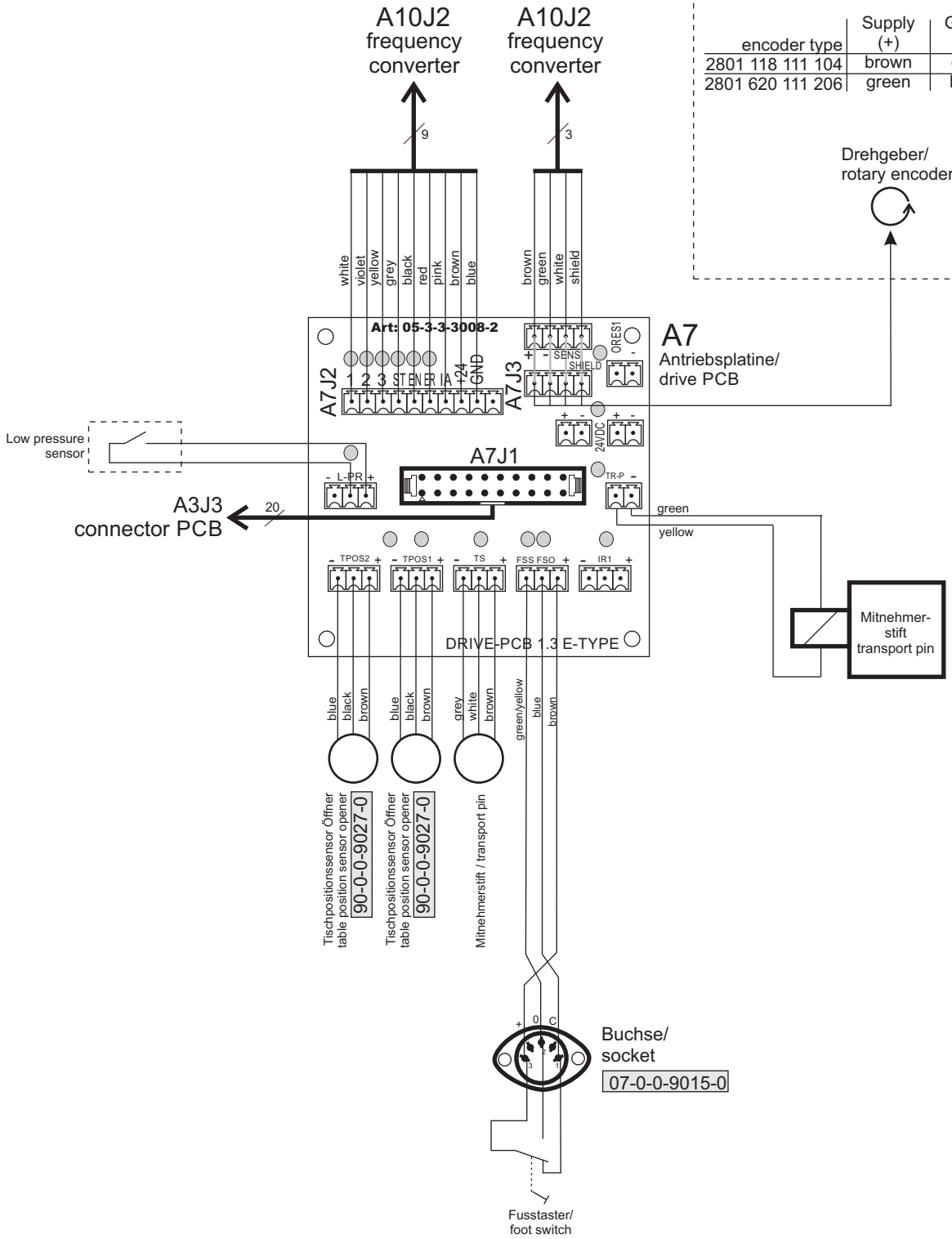

	Wiring diagram X-Type Inel	
MHM PERFECTION IN SCREENPRINTING	Antriebsplatine/ drive PCB	
	REV 1.5	Seite/page 8

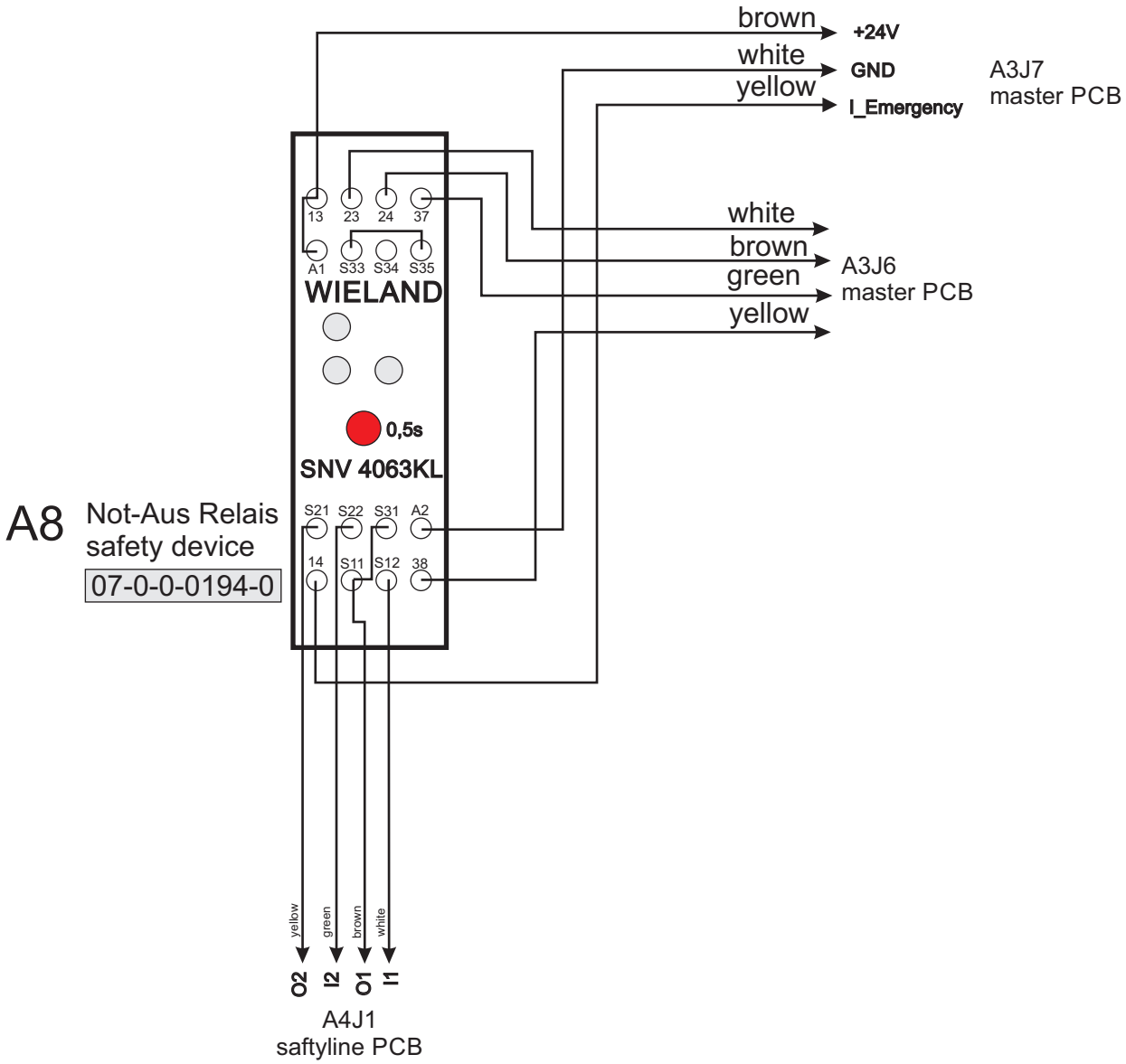

	Wiring diagram X-Type Inel
MHM PERFECTION IN SCREENPRINTING	Not-Halt Relais/ safety device
	REV 1.5 — Seite/page 9

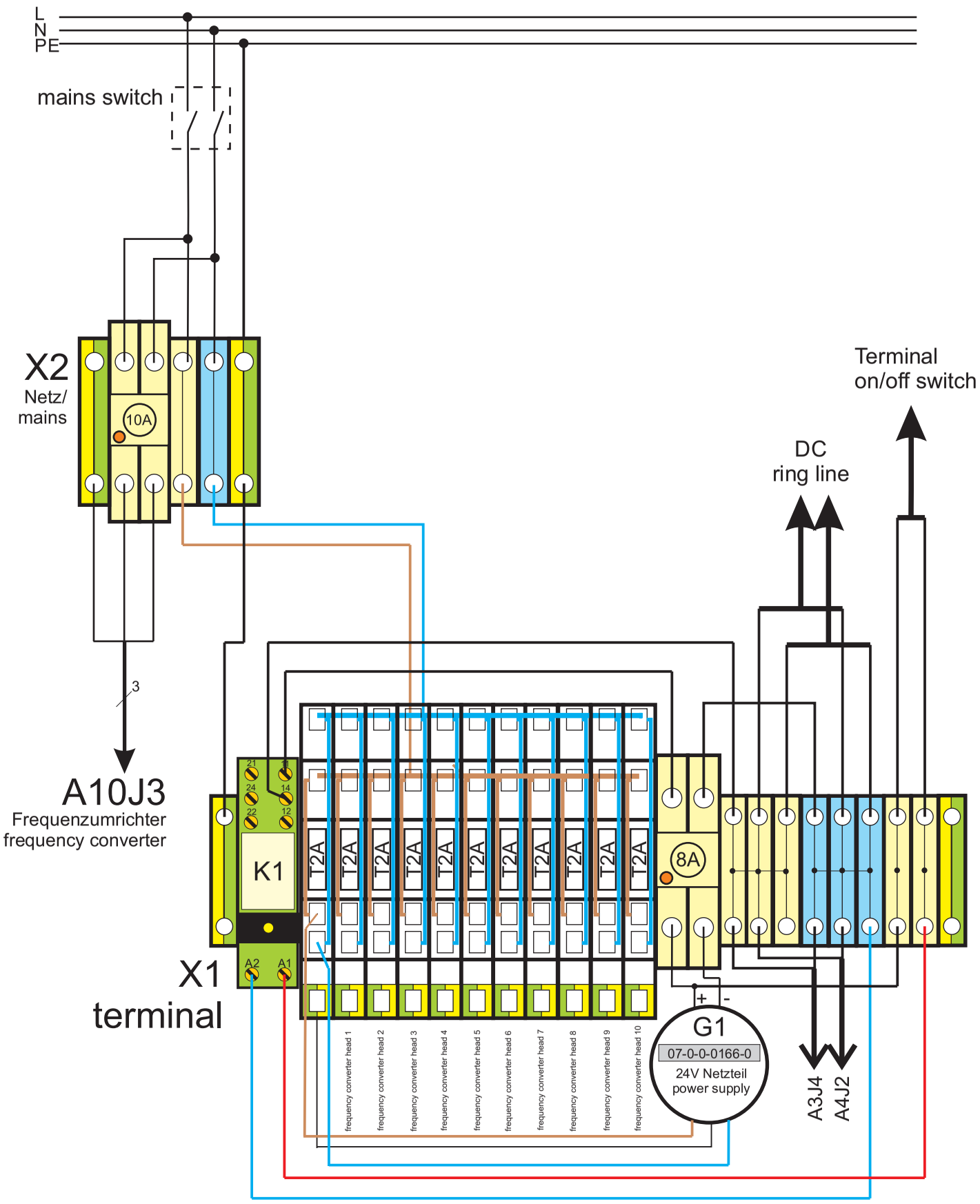

	Wiring diagram X-Type Inel	
MHM PERFECTION IN SCREENPRINTING	Klemmenblock/ terminal block	
	REV 1.5	Seite/page 10

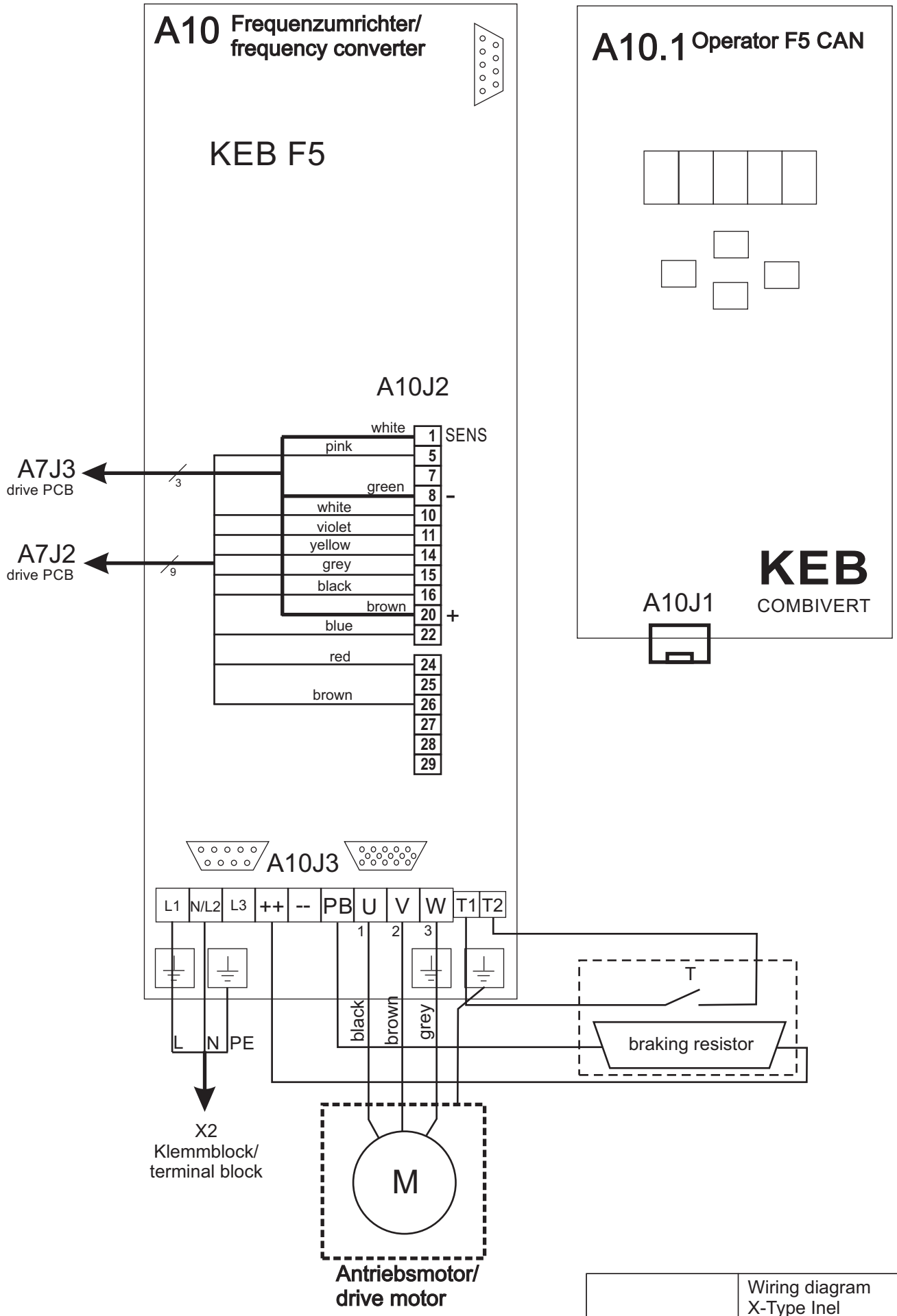

	Wiring diagram X-Type Inel
MHM PERFECTION IN SCREENPRINTING	Frequenzumrichter/ frequency converter
REV 1.5	Seite/page 11

A11
Samsung Galaxy Tab2
07-0-0-0438-0

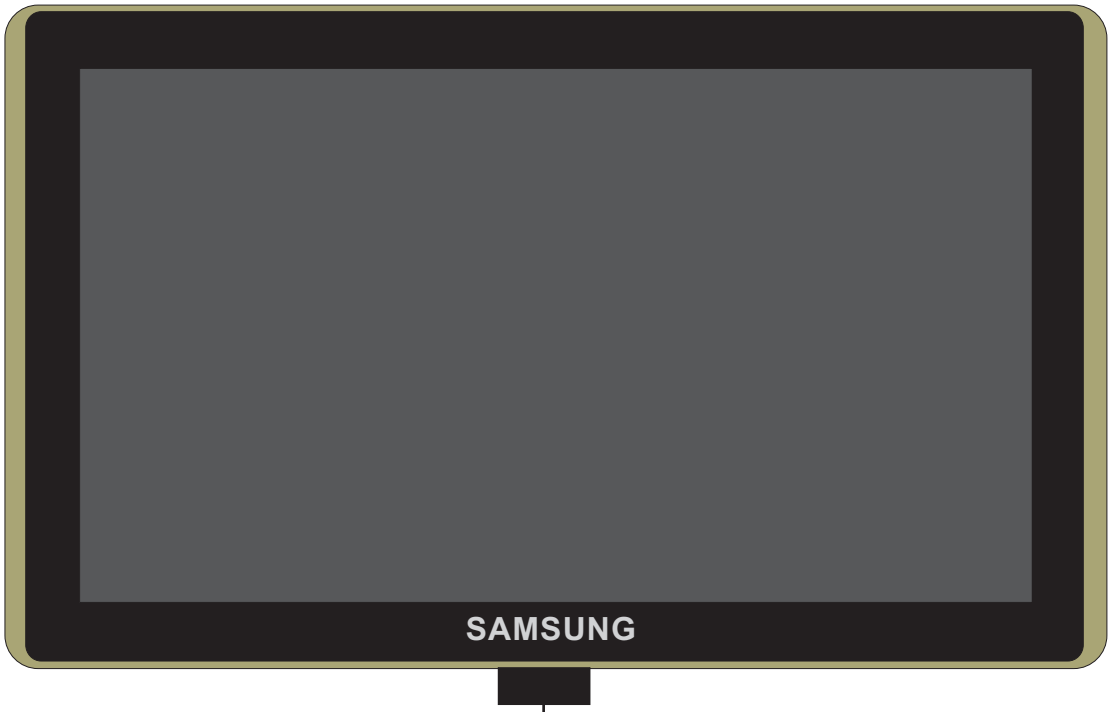

A12
Terminal Modul PCB
05-3-3-10104-0

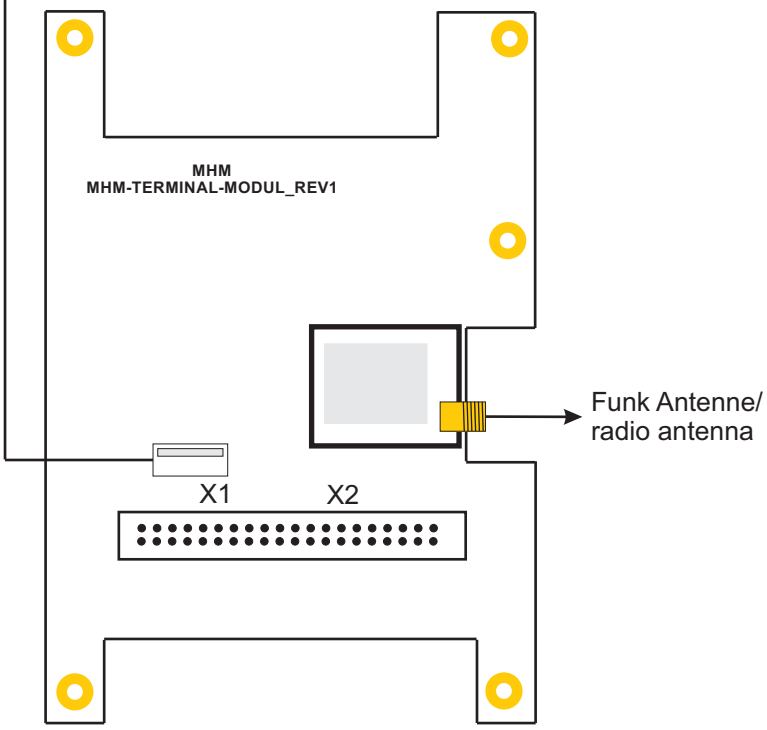

	Wiring diagram X-Type Inel
MHM PERFECTION IN SCREENPRINTING	M - Touch Pro/ m - touch pro
	REV 1.5 — Seite/page 12